Multi Touch Screen Trolley – Assembly Instructions

Contents of two packages

Fastener pack:

- M12x35 hex head bolts x 4
- M12 nyloc nuts x 4
- M10x70 button sockethead bolts x 4
- M10x40 button sockethead bolt x 1
- M10 nyloc nuts x 5
- M8x55 button sockethead bolts x 9
- M8 x 16 button sockethead bolts x 13
- M8 x 25 hex head bolts x 4
- M8 flat washers x 4
- M8 nyloc nuts x 22
- M4 x 10 countersunk phillips head bolts x 2
- M4 nyloc nuts x 2

4 x 50mm square plastic knock-in end caps

Actuator with power lead, power pack, remote, remote bracket

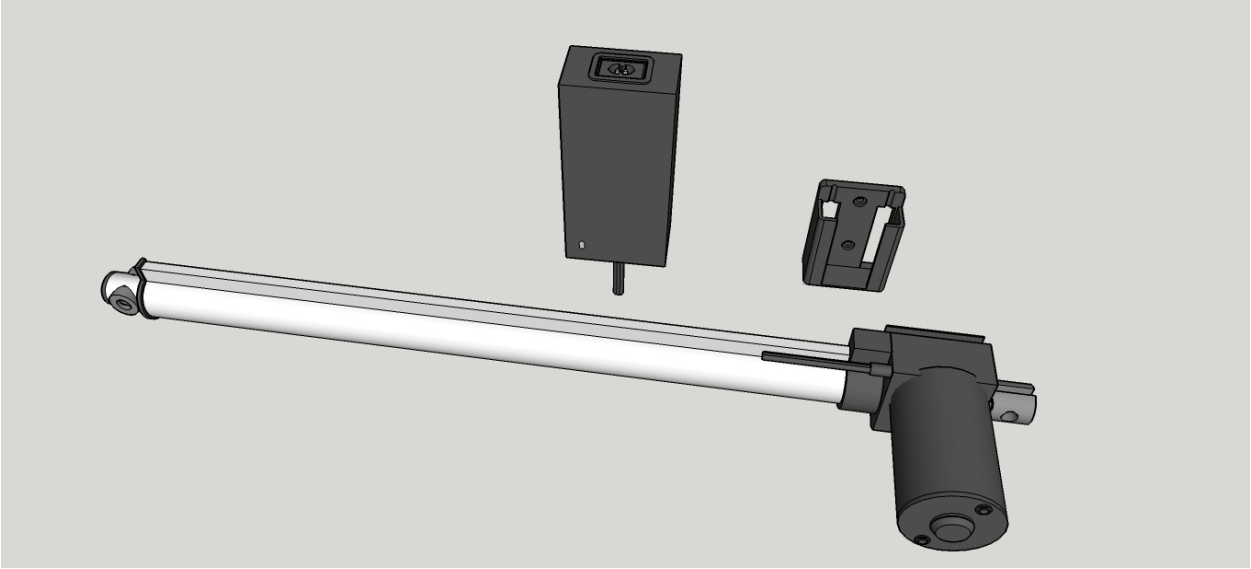

Two swivel and two swivel lockable castors

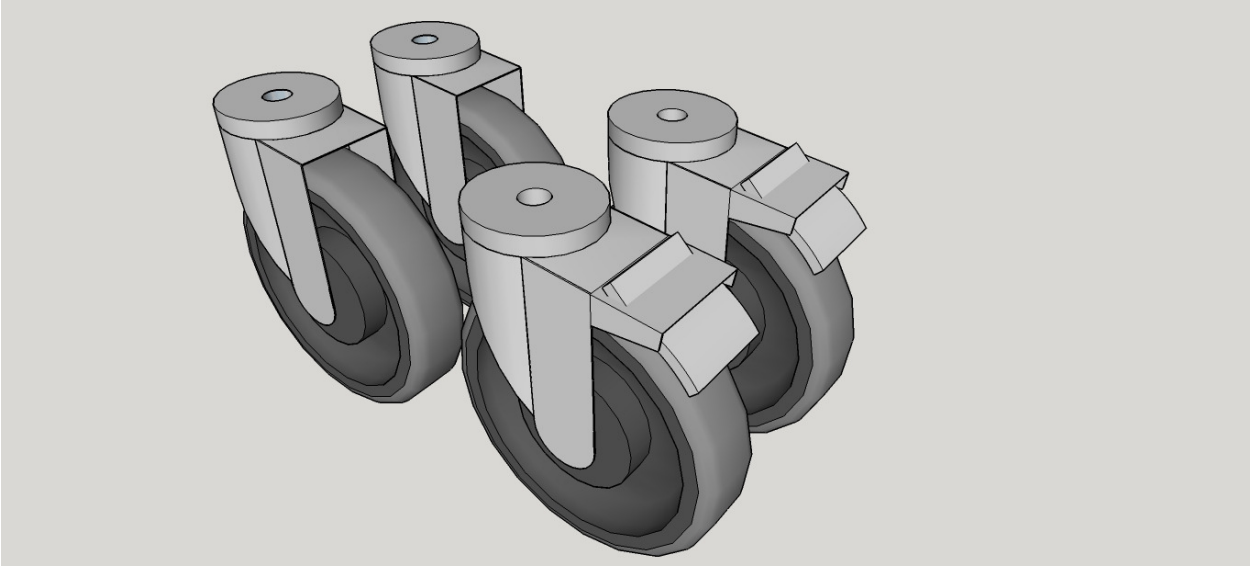

Base legs x 2

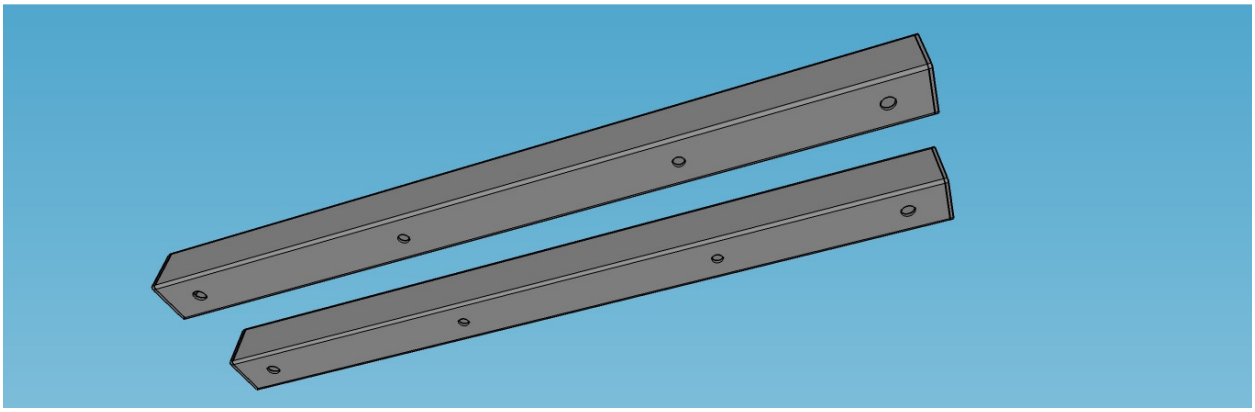

Base crosspiece

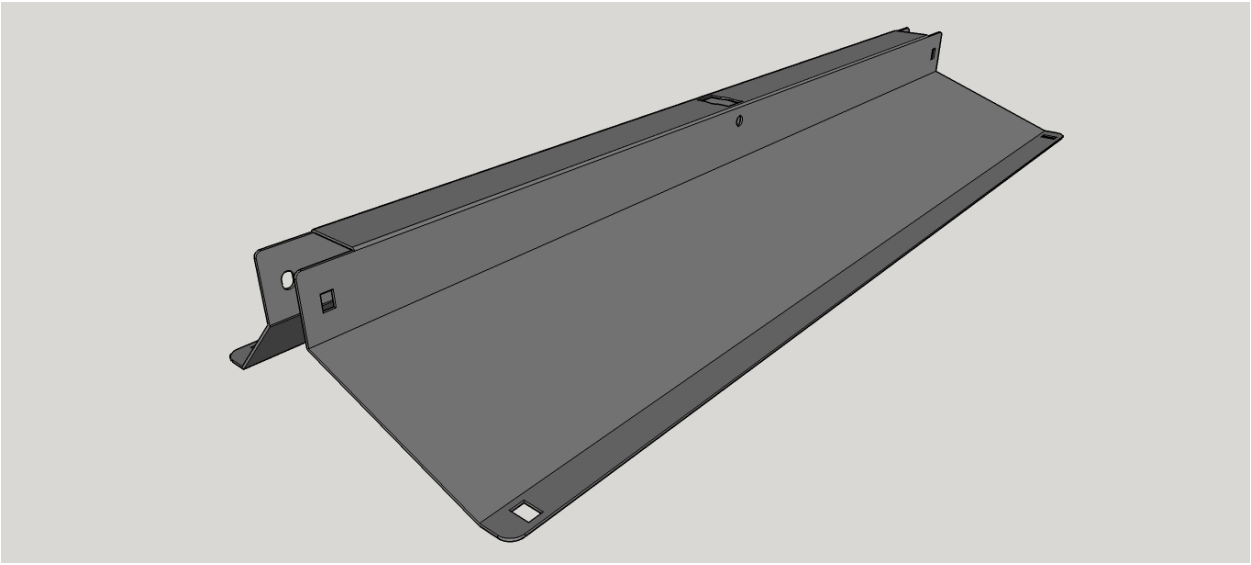

Uprights x 2

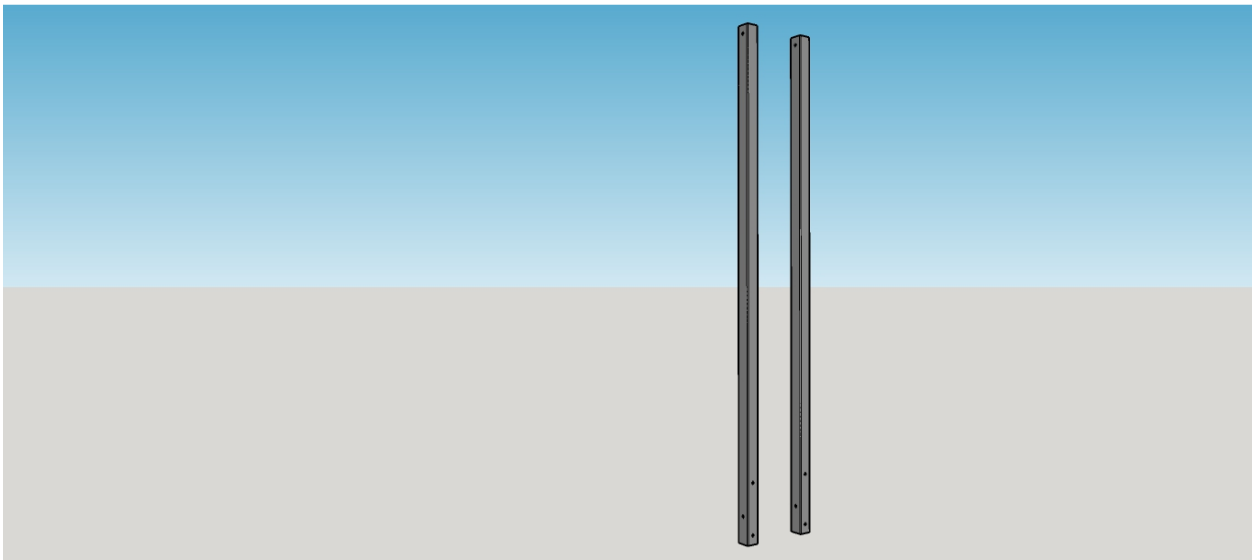

Upright side supports x 2

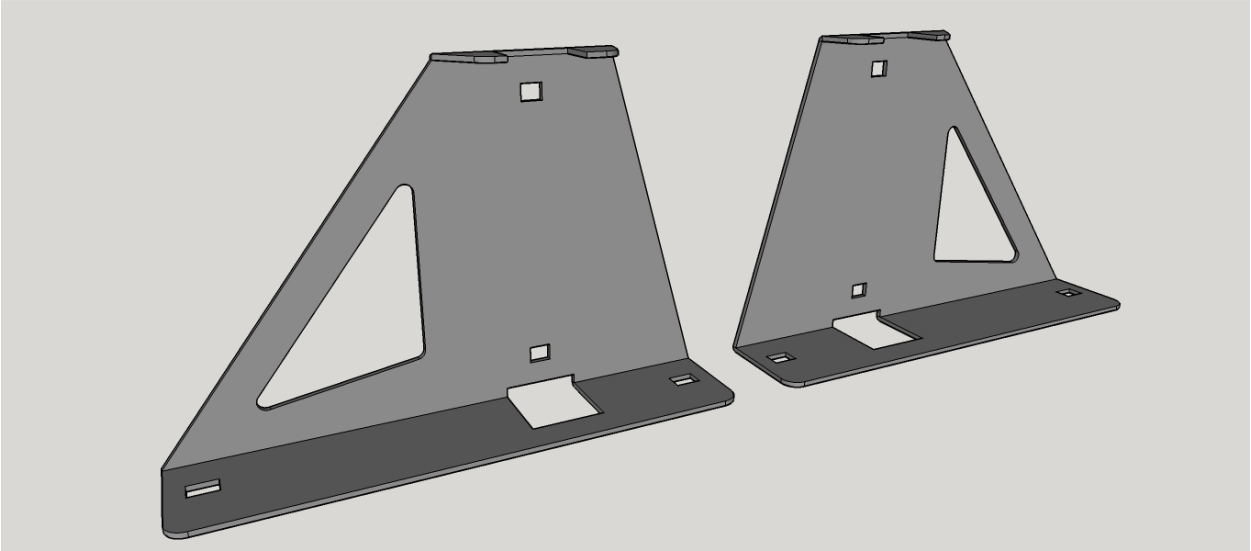

Horizontal mounting bars x 2

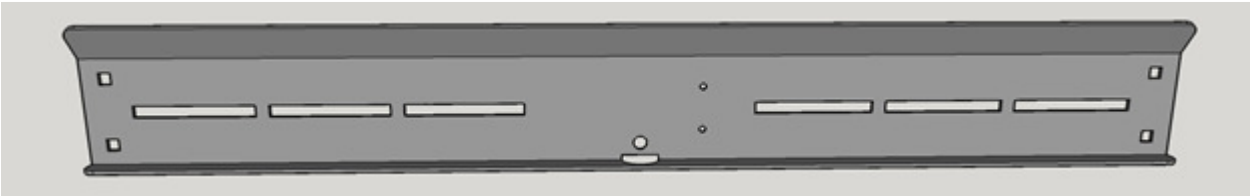

Screen mounts x 2

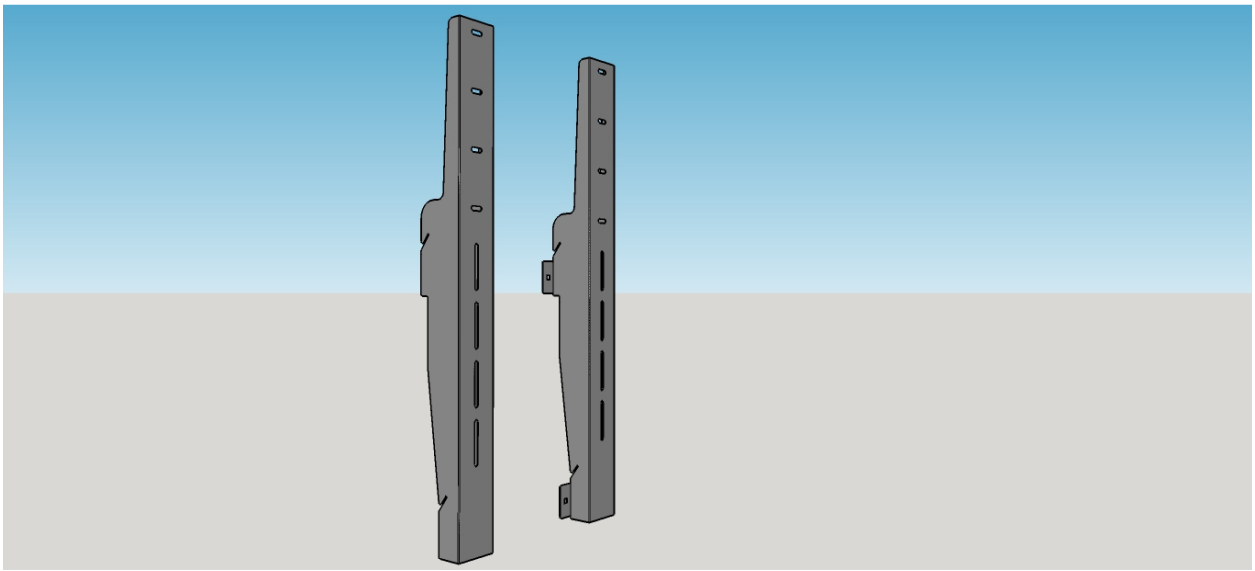

Slides x 2 (with plastic slide bearings fitted)

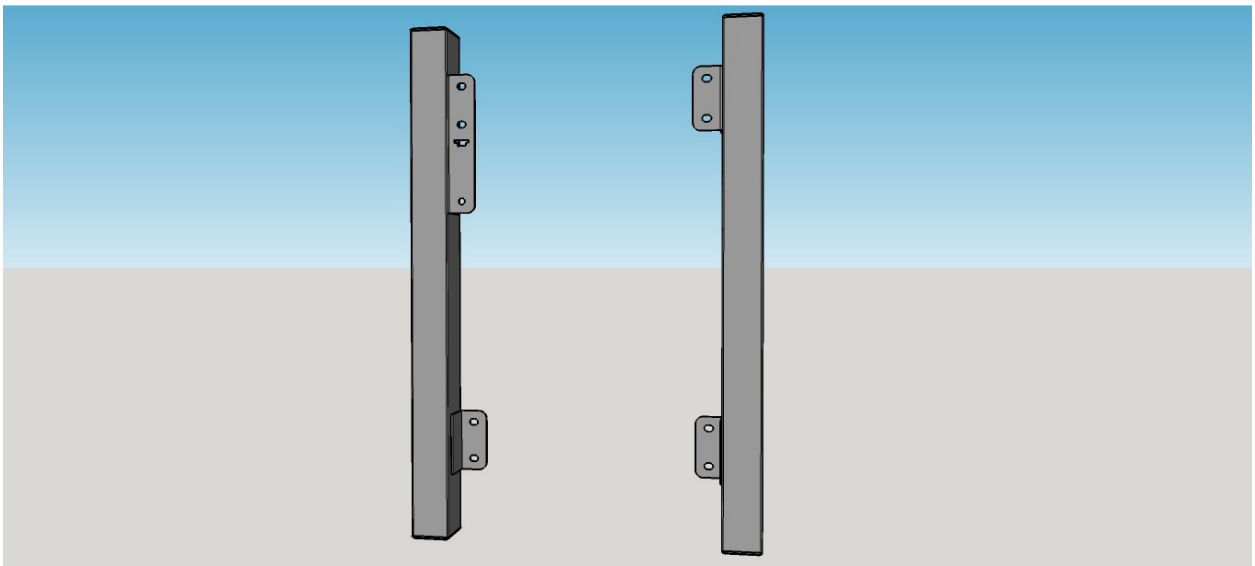

Power pack bracket

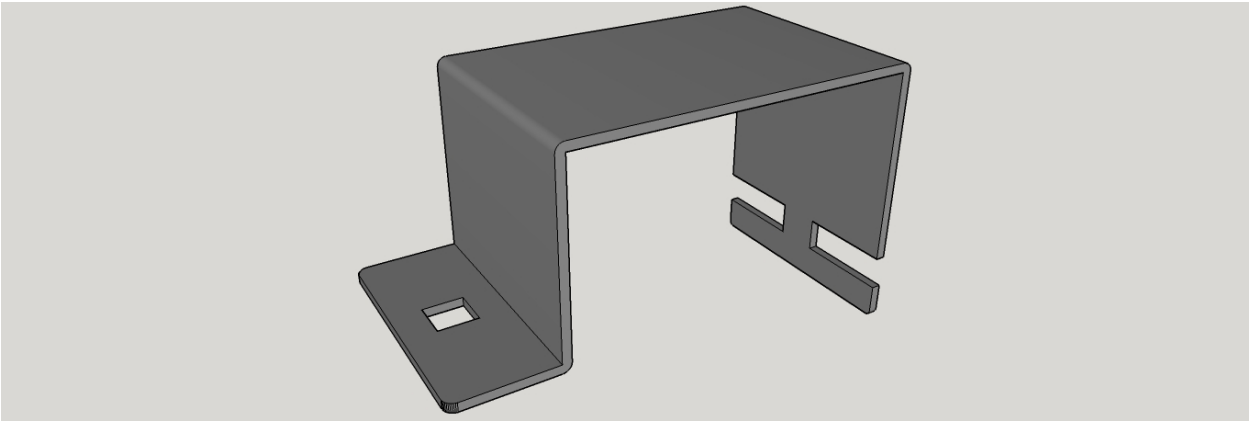

ASSEMBLY INSTRUCTIONS

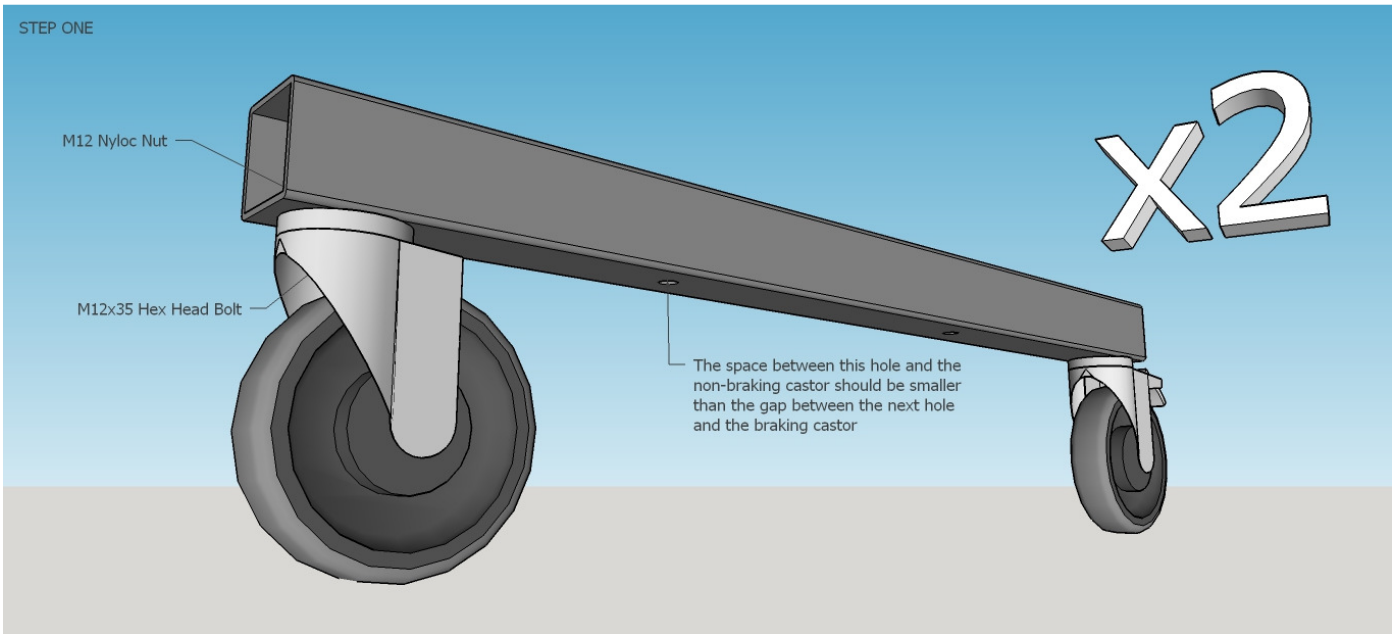

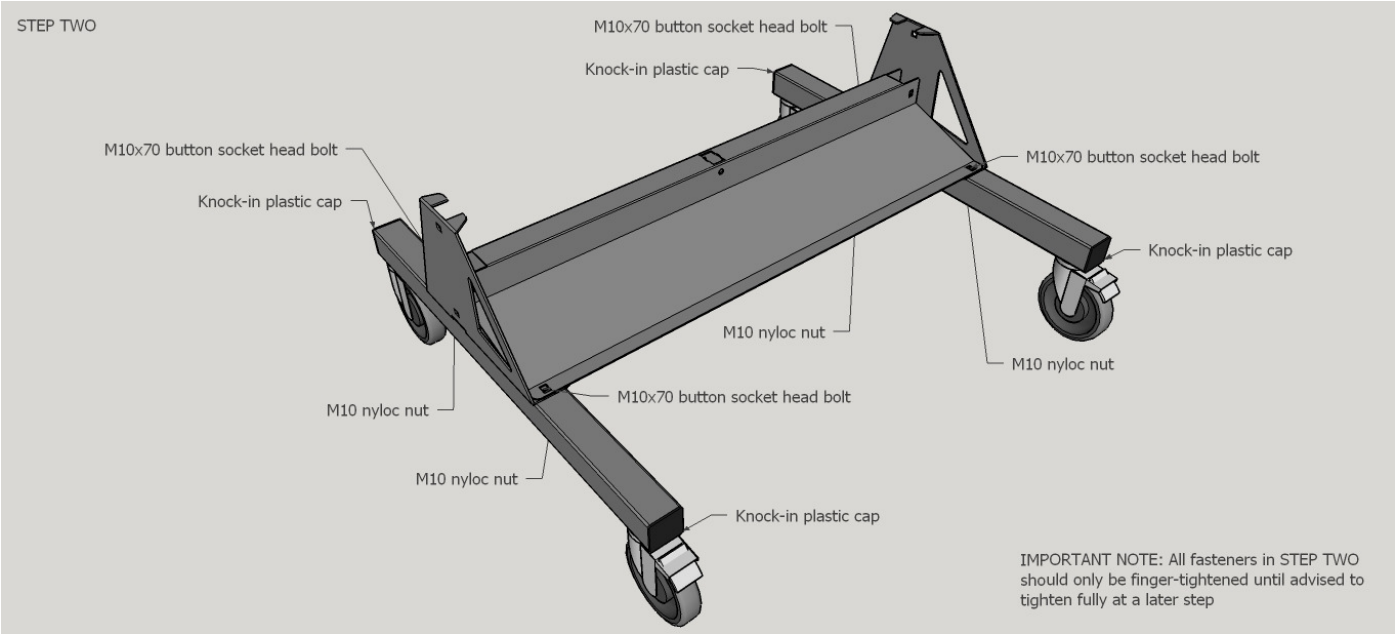

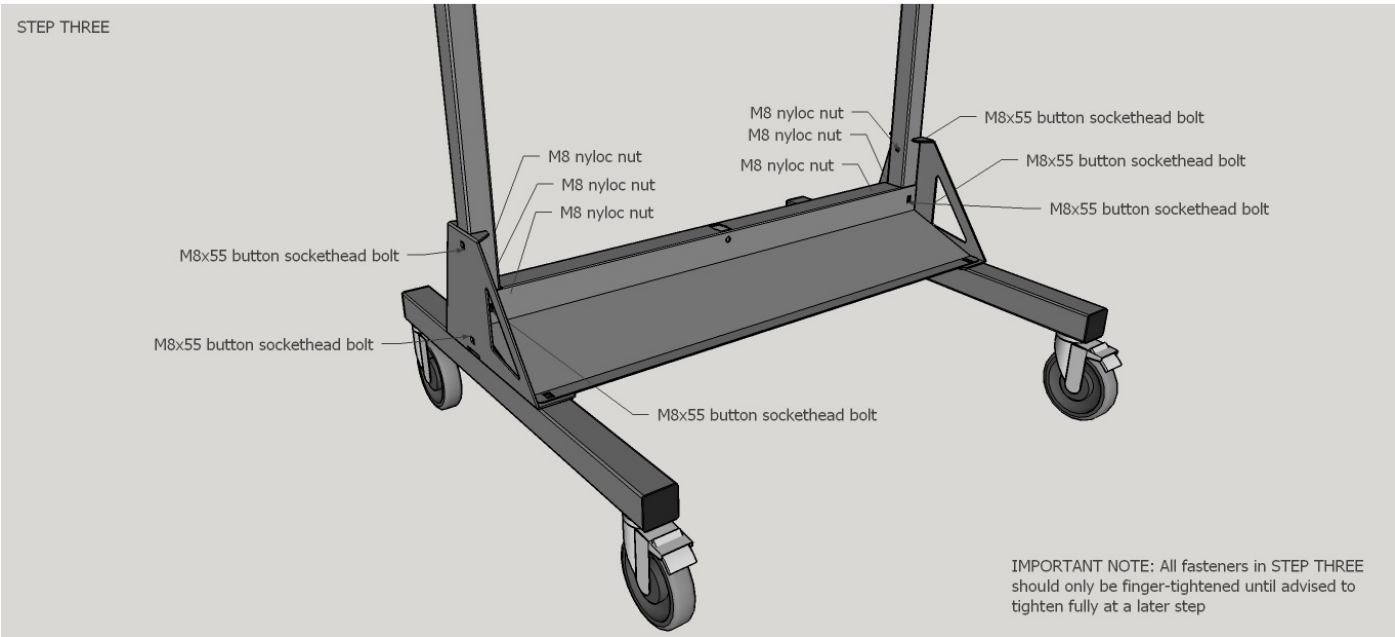

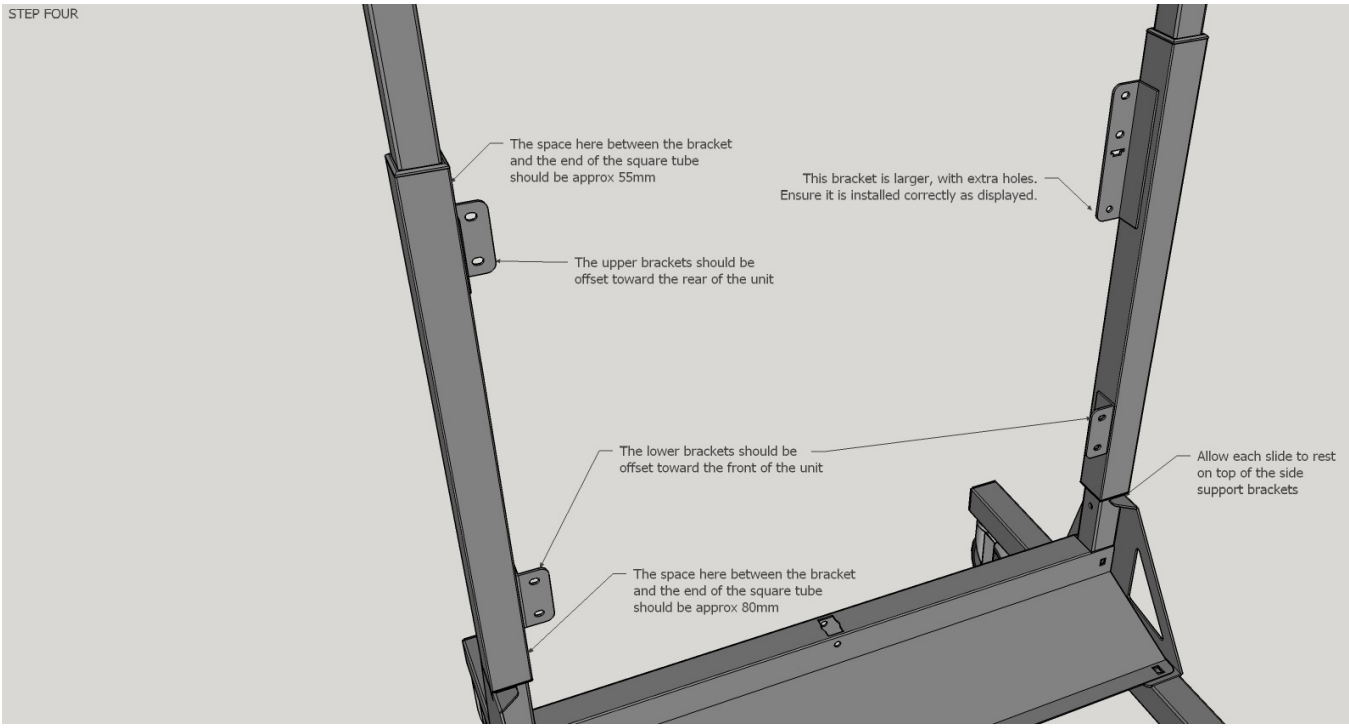
STEP FOUR
The space here between the bracket and the end of the square tube should be approx 55mm
This bracket is larger, with extra holes. Ensure it is installed correctly as displayed.
The upper brackets should be offset toward the rear of the unit
The lower brackets should be offset toward the front of the unit
Allow each slide to rest on top of the side support brackets
The space here between the bracket and the end of the square tube should be approx 80mm

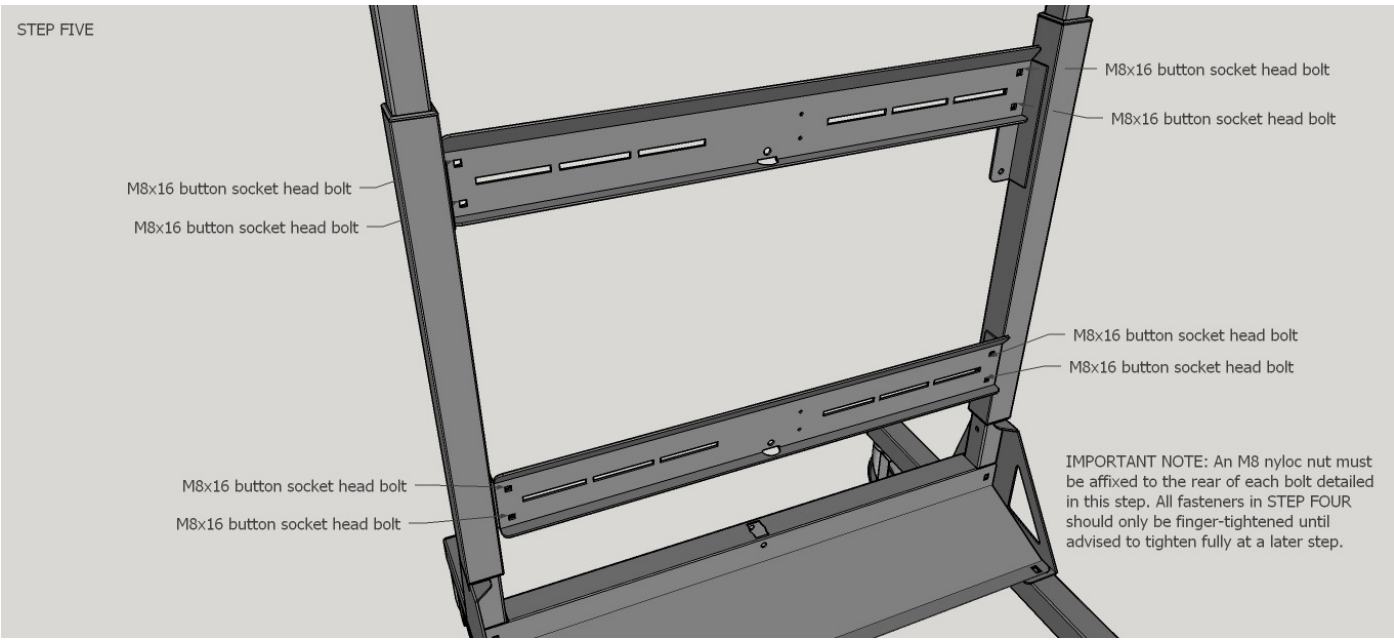
STEP FIVE
M8x16 button socket head bolt
M8x16 button socket head bolt
M8x16 button socket head bolt
M8x16 button socket head bolt
M8x16 button socket head bolt
M8x16 button socket head bolt
M8x16 button socket head bolt
M8x16 button socket head bolt
IMPORTANT NOTE: An M8 nyloc nut must be affixed to the rear of each bolt detailed in this step. All fasteners in STEP FOUR should only be finger-tightened until advised to tighten fully at a later step.

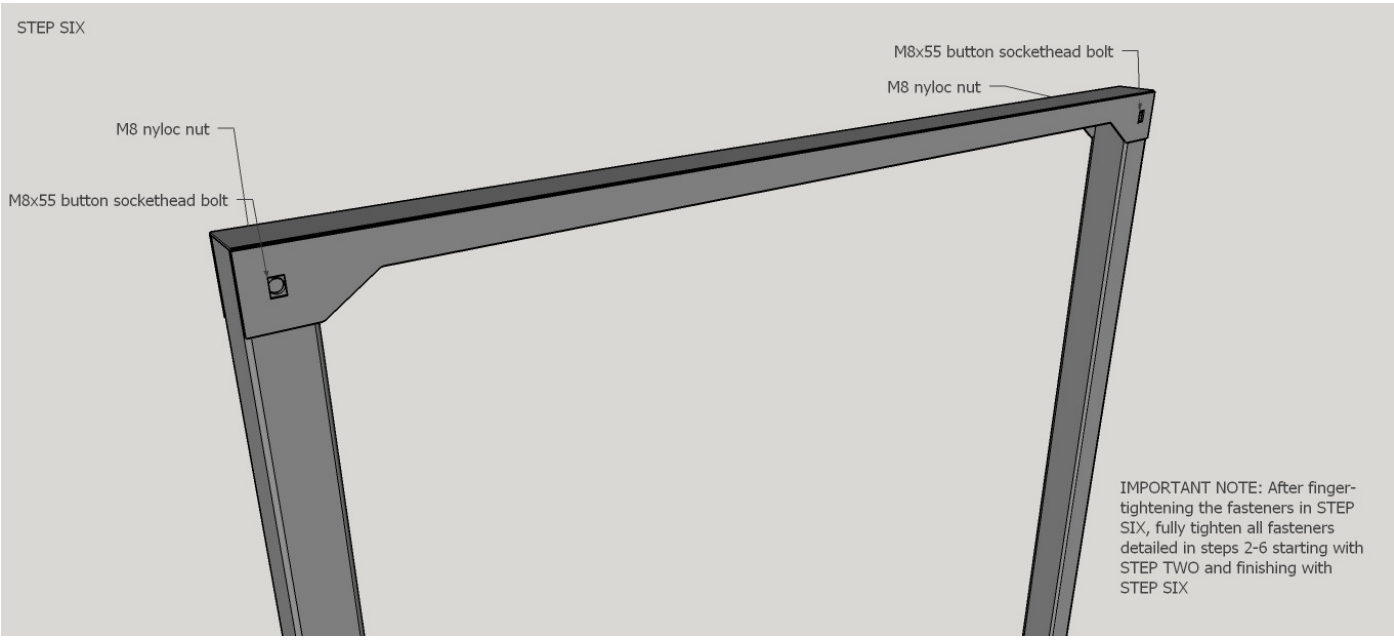
STEP SIX
M8x55 button sockethead bolt
M8 nyloc nut
M8 nyloc nut
M8x55 button sockethead bolt
IMPORTANT NOTE: After finger-tightening the fasteners in STEP SIX, fully tighten all fasteners detailed in steps 2-6 starting with STEP TWO and finishing with STEP SIX

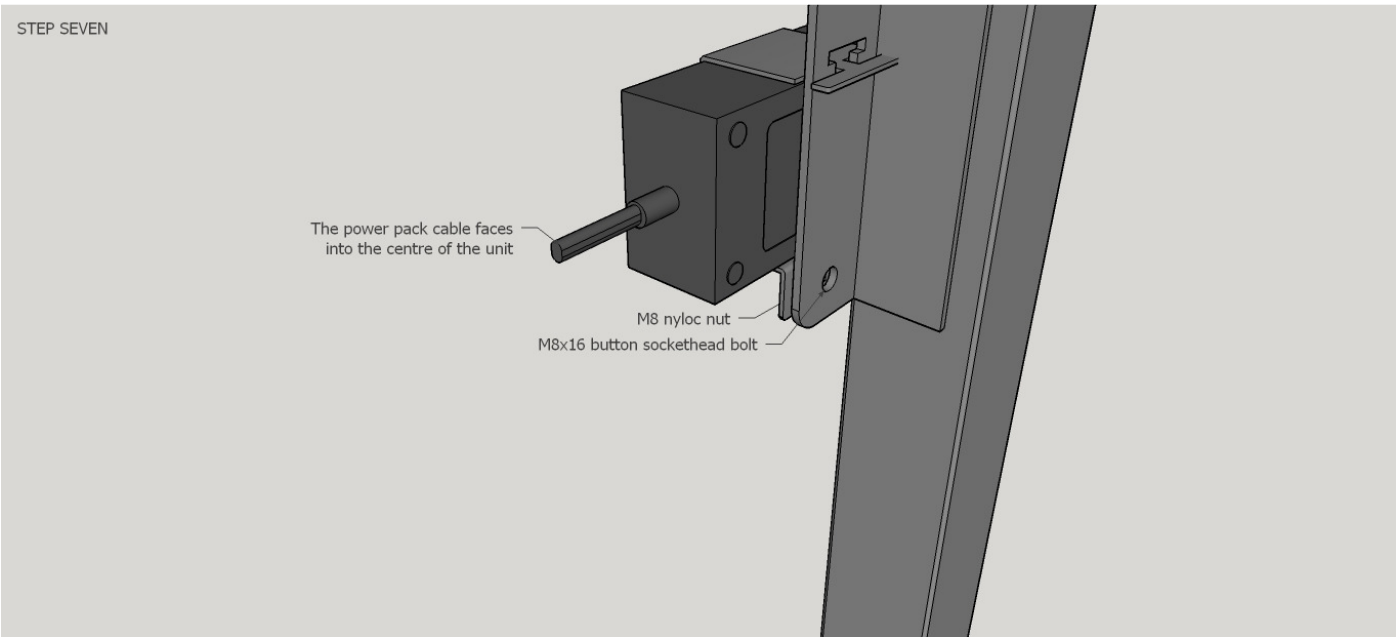
STEP SEVEN
The power pack cable faces into the centre of the unit
M8 nyloc nut
M8x16 button sockethead bolt

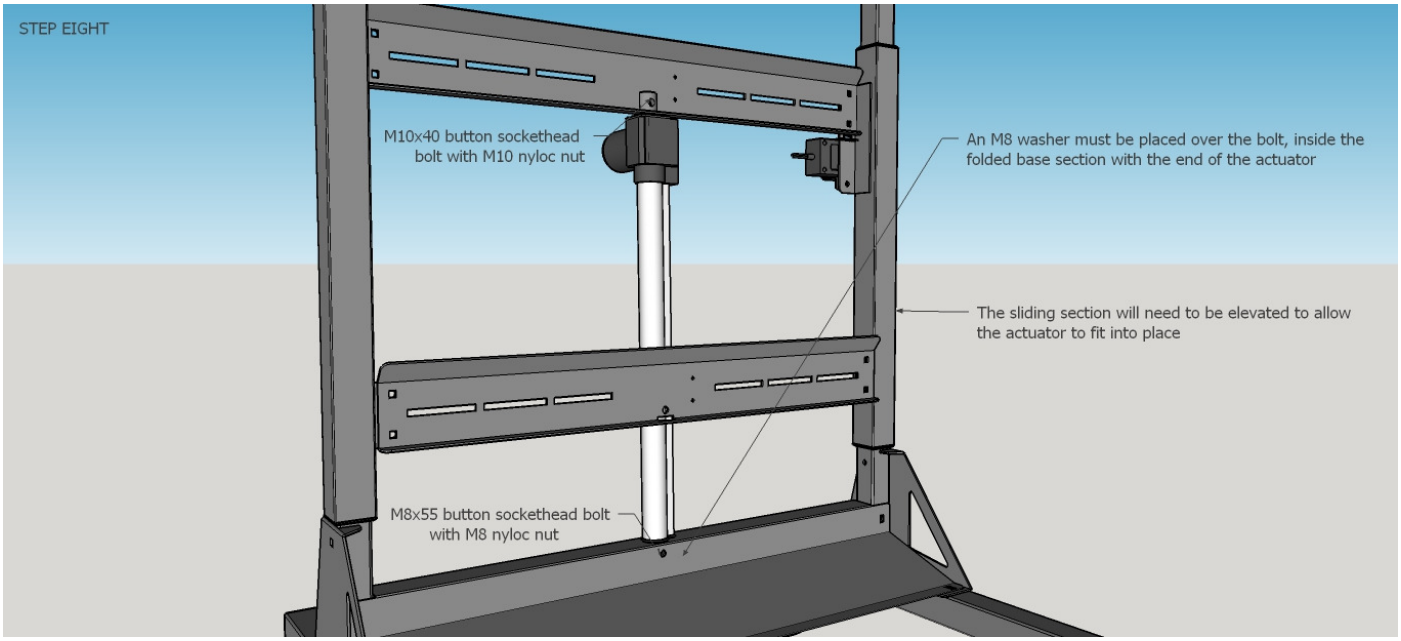
STEP EIGHT
M10x40 button sockethead bolt with M10 nyloc nut
An M8 washer must be placed over the bolt, inside the folded base section with the end of the actuator
The sliding section will need to be elevated to allow the actuator to fit into place
M8x55 button sockethead bolt with M8 nyloc nut

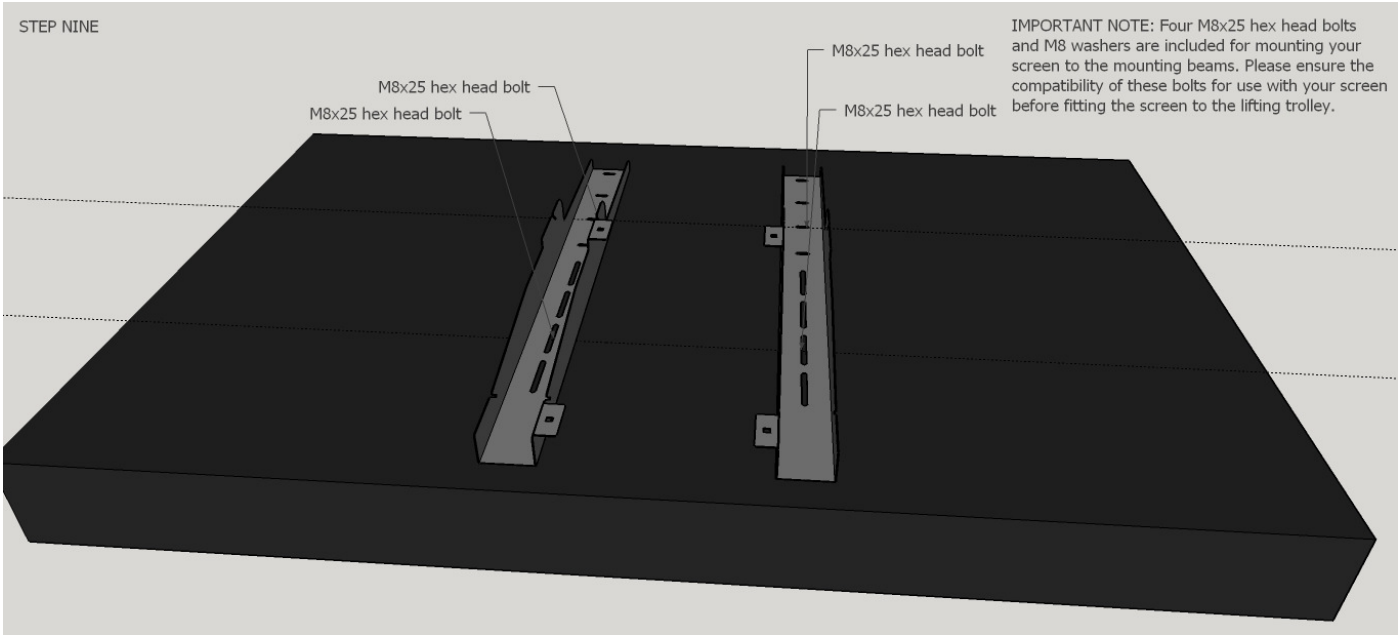
STEP NINE
IMPORTANT NOTE: Four M8x25 hex head bolts and M8 washers are included for mounting your screen to the mounting beams. Please ensure the compatibility of these bolts for use with your screen before fitting the screen to the lifting trolley.
M8x25 hex head bolt
M8x25 hex head bolt
M8x25 hex head bolt
M8x25 hex head bolt

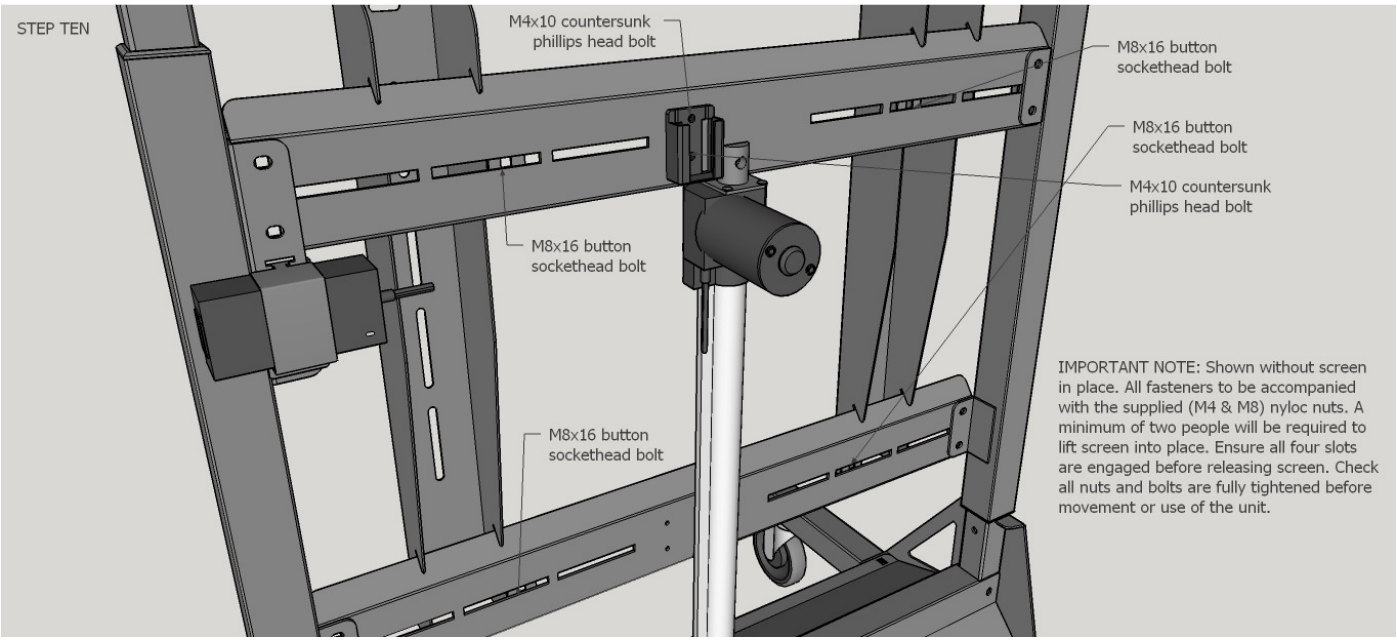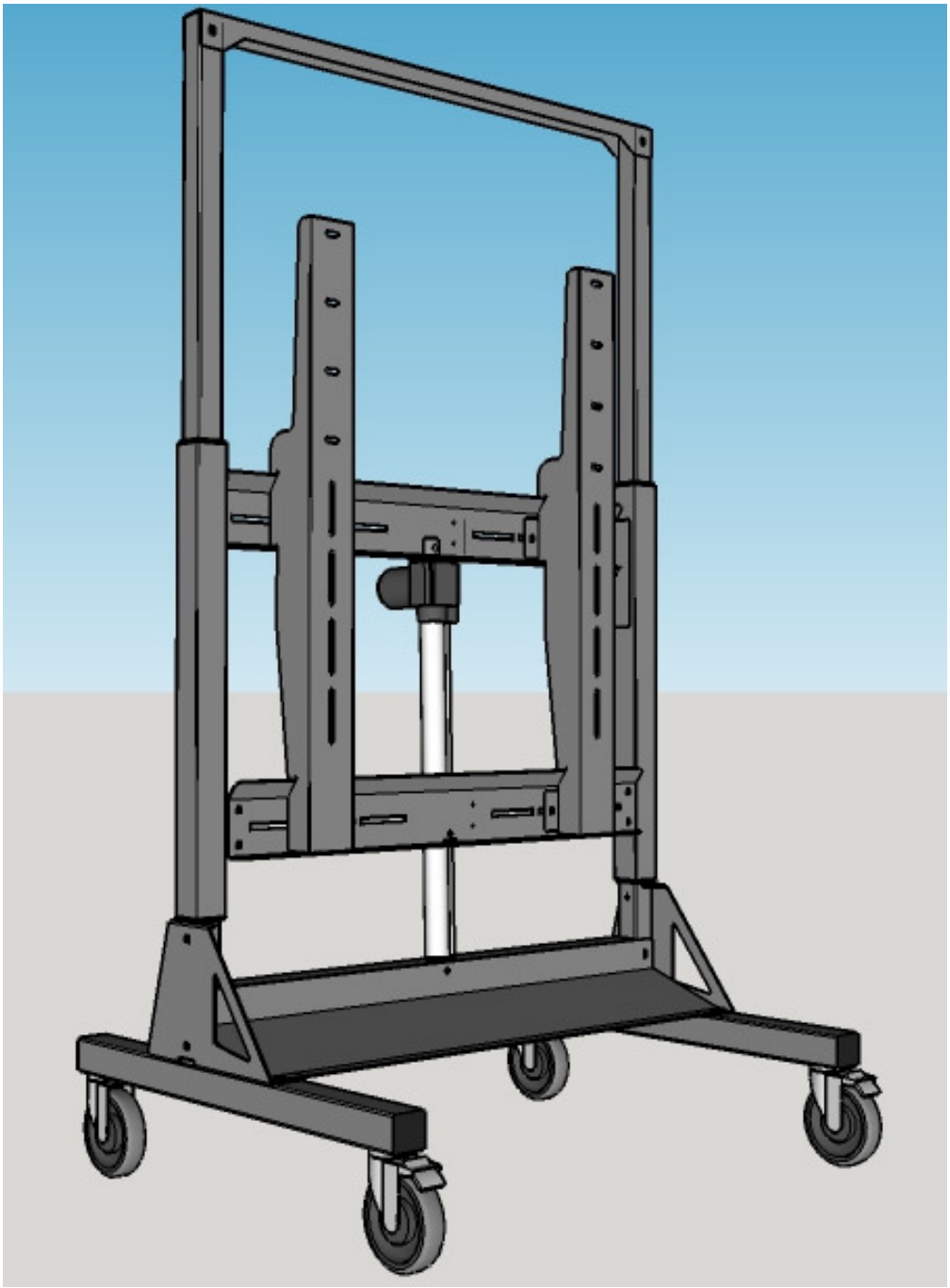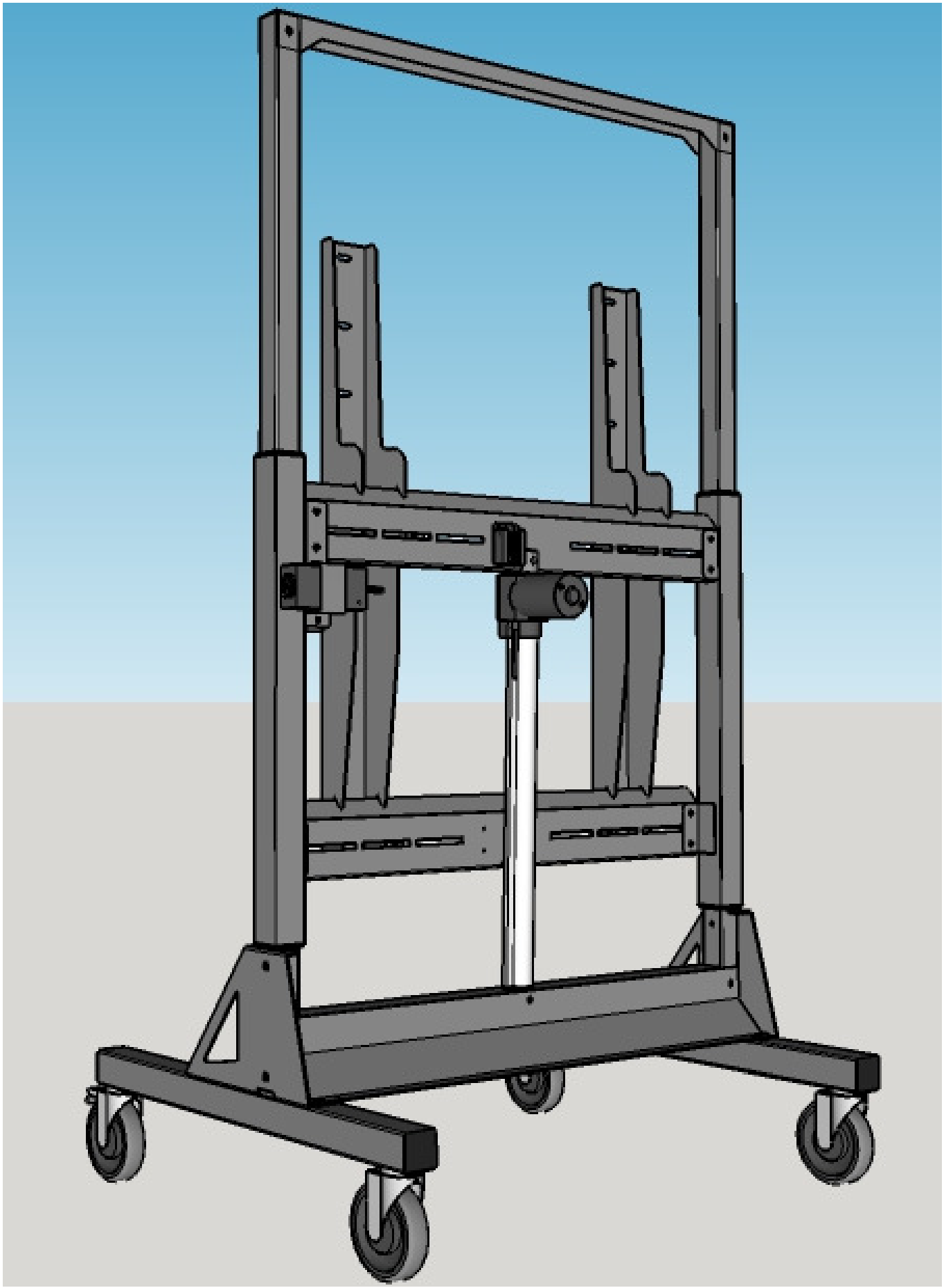
STEP TEN
M4x10 countersunk phillips head bolt
M8x16 button sockethead bolt
M8x16 button sockethead bolt
M4x10 countersunk phillips head bolt
M8x16 button sockethead bolt
M8x16 button sockethead bolt
IMPORTANT NOTE: Shown without screen in place. All fasteners to be accompanied with the supplied (M4 & M8) nyloc nuts. A minimum of two people will be required to lift screen into place. Ensure all four slots are engaged before releasing screen. Check all nuts and bolts are fully tightened before movement or use of the unit.